Amc Unit-4 Formulae Sheet

- On applying (-ve) feedback, by a factor of $(1+A\beta)$;

increases	decreases
input impedance	output impedance
bandwidth	noise
stability	distortion

- for any series amplifier → voltage source is in input
- for any shunt amplifier → current source is in input

- source on output side matches the name of the amplifier.
current → ⊕ ; voltage → ⊕

Amplifiers

current series (Transconductance amp) (o/p current feedback in series)			$R_{if} = R_i(1+A\beta)$	$R_{of} = R_o(1+A\beta)$
current shunt (current amplifier) (o/p current feedback in shunt)			$R_{if} = \frac{R_i}{1+A\beta}$	$R_{of} = R_o(1+A\beta) = \frac{V_o}{I_o}$
voltage series (voltage amplifier) (o/p voltage feedback in series)			$R_{if} = R_i(1+A\beta)$	$R_{of} = \frac{R_o}{1+A\beta}$
voltage shunt (transistor amplifier) (o/p voltage feedback in shunt)			$R_{if} = \frac{R_i}{1+A\beta}$	$R_{of} = \frac{R_o}{1+A\beta}$

VSFA → Voltage Series Feedback Amplifier

$$R_{if} = R_i(1+A\beta)$$

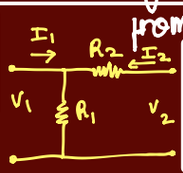

from voltage divider rule

$$V_1 = \frac{V_2 R_1}{R_1+R_2}$$

$$A_f = 1 + \frac{R_2}{R_1}$$

$$R_{of} = \frac{R_o}{1+A\beta}$$

$$A = \frac{V_o}{V_s} = \frac{\mu R_{id}(R_L \| R_{22})}{(R_s+R_{id}+R_{11}) \times (r_o + (R_L \| R_{22}))}$$

A → open loop gain

$$R_{11} = R_1 \| R_2 = h_{11}$$

$$A_f = \frac{A}{1+A\beta}$$

$$R_{22} = R_1 + R_2 = \frac{1}{h_{22}}$$

$$R_{in} = R_s + R_{id} + R_{11}$$

$$V_2 = I_2 R_{22} = \frac{I_2}{H_{22}}$$

$$R_{out} = r_o + (R_L \| R_{22})$$

$$R_{in} = R_{if} - R_s$$

$$\beta = \frac{R_1}{R_1+R_2}$$

$$h_{12} = \frac{V_1}{V_2} \text{ voltage source}$$

$$R_{of} = R_{out} \| R_L$$

$$h_{21} = \frac{I_2}{I_1} \text{ current source}$$

Mug it up!

Types of power amplifiers :-

1. Class A

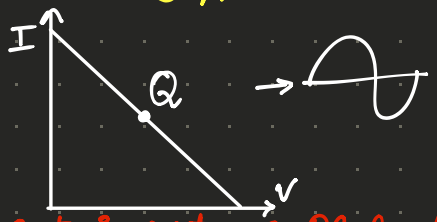

Q pt. in centre of DC load line

⊕ faithful amplification

⊖ efficiency is lower (25%)

2. Class B

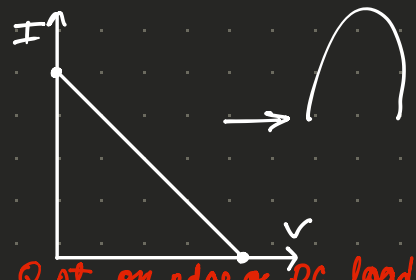

Q pt. on edge of DC load line

⊕ higher efficiency (78.5%)

⊖ only half waveform in op

↳ transistors used to overcome it.

3. Class AB

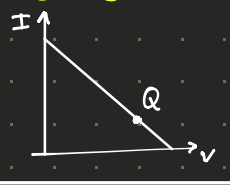

4. Class C

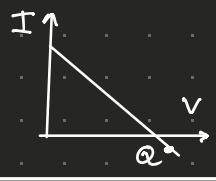

$\beta = \infty$ means $I_C = I_E$ & $I_B = 0$

In general, $V_{BE} = -0.7\,V$

Power Formulae

1. Series fed Class A Amplifier:

Max output $\boxed{(P_o) = \frac{V_{CC}^2}{8R_L}}$

$$\boxed{P_{o(ac)} = \left(\frac{i_c}{\sqrt{2}}\right)^2 \times R_L}$$

$$\boxed{P_{in(dc)} = V_{CC} \times I_{dc}}$$ → dc current

$$\boxed{\text{efficiency} = \frac{P_{o(ac)}}{P_{in(dc)}}}$$

2. Transformer Coupled Class A Amplifier

Reflected load impedance

$$\boxed{R_L' = \left(\frac{n_1}{n_2}\right)^2 \times R_L}$$

3. Class B

max^m. output power

$$\boxed{P_{o(ac)} = \frac{\left(\frac{V_P}{\sqrt{2}}\right)^2}{R_L}}$$

$$\boxed{P_{in(dc)} = \frac{V_{CC} \times 2I_P}{\pi}}$$

$$\boxed{\text{efficiency}(\eta) = \frac{P_{o(ac)}}{P_{in(dc)}}}$$

→ dual supply $P_o = \frac{V_{CC}^2}{2R_L}$

→ single power supply $P_o = \frac{V_{CC}^2}{8R_L}$

4. (In general) Dissipation in each Transistor

$$\boxed{\frac{P_{in} - P_o}{2} = D}$$

Max^m power dissipation capability of each transistor = $\boxed{D_{max} = \frac{2}{\pi^2} \times P_{o(max)}}$

where $\boxed{P_{o(max)} = \frac{V_{CC}^2}{2R_L}}$

Power BJTs

JCSA

$\boxed{T_J - T_A = \theta_{JA} \times P_d}$; P_{dmax}

where $\theta_{JA} = \theta_{JC} + \theta_{CS} + \theta_{SA}$

$\boxed{T_J - T_C = \theta_{JC} \times P_d}$

$\boxed{T_J - T_S = \theta_{JS} \times P_d}$

where $\theta_{JS} = \theta_{JC} + \theta_{CS}$
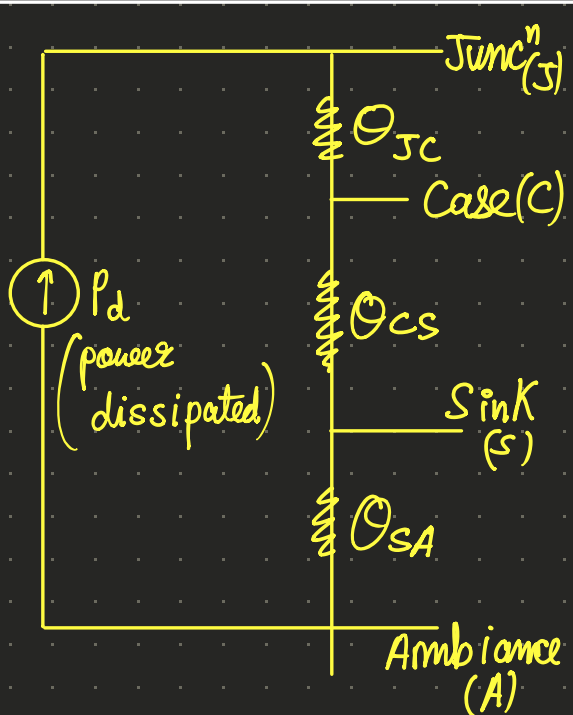
if the heat sink is "∞": $\theta_{CA} = 0$